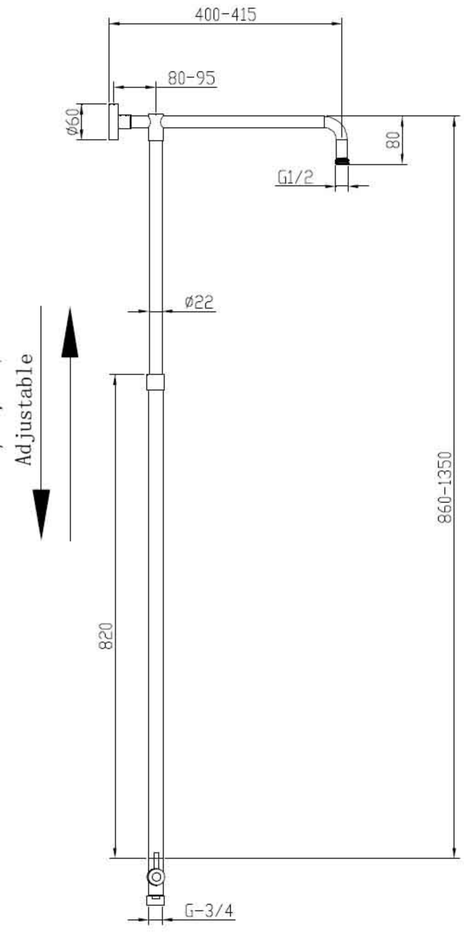
400-415
80-95
Ø60
80
G1/2
Ø22
Adjustable
860-1350
820
G-3/4

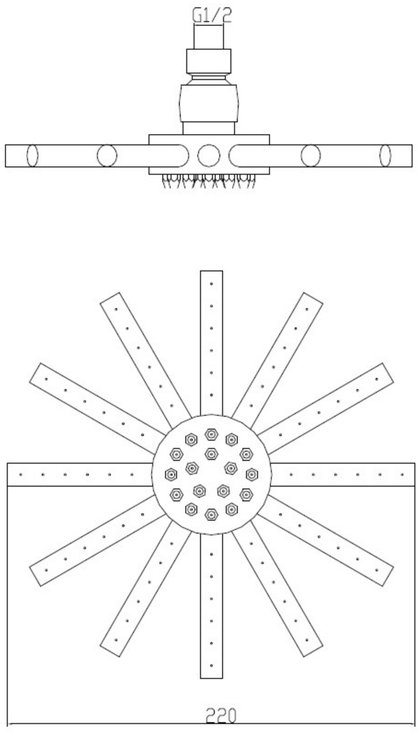
G1/2
220

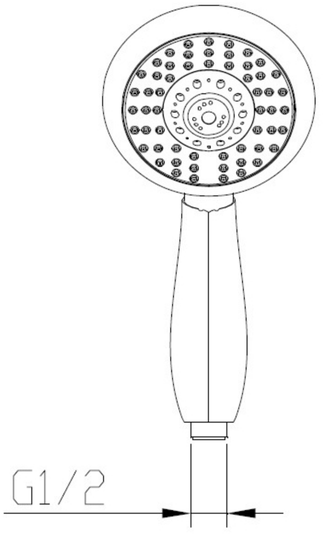
G1/2

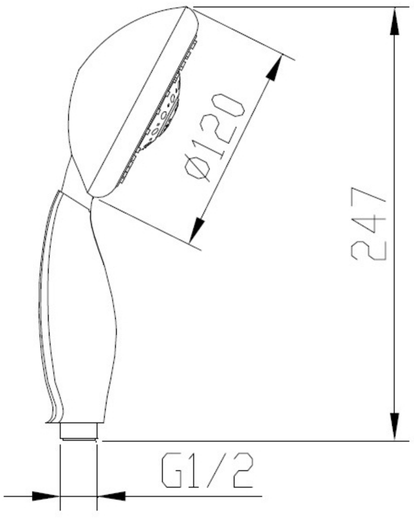
Ø120
247
G1/2

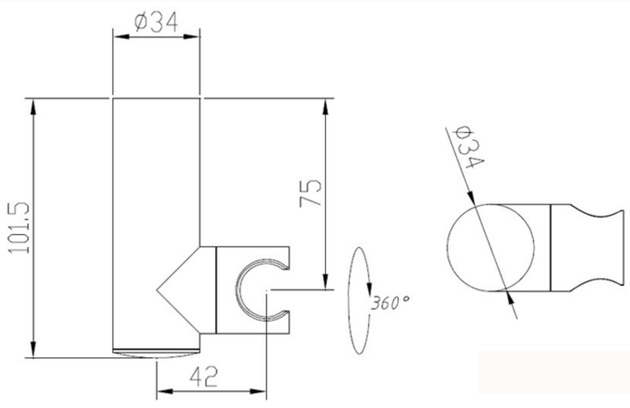
Ø34
101.5
75
360°
42
Ø34

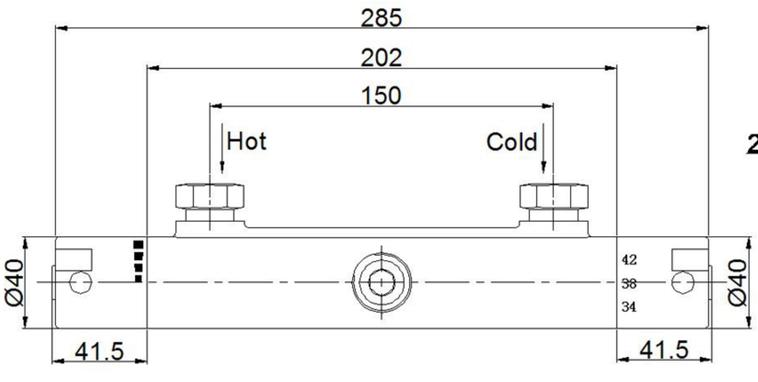
285
202
150
Hot
Cold
Ø40
42
38
34
Ø40
41.5
41.5

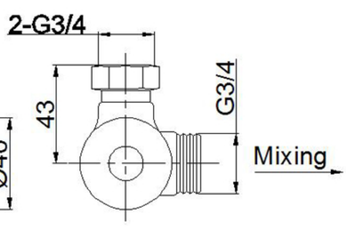
2-G3/4
43
G3/4
Mixing